YASKAWA

YRC1000micro
SUPPLEMENTARY INSTRUCTIONS

FOR EUROPEAN STANDARD

Upon receipt of the product and prior to initial operation, read these instructions thoroughly, and retain for future reference.

MOTOMAN INSTRUCTIONS

MOTOMAN-□□□ INSTRUCTIONS
YRC1000micro INSTRUCTIONS
YRC1000micro OPERATOR'S MANUAL
YRC1000micro MAINTENANCE MANUAL
YRC1000micro ALARM CODES (MAJOR ALARMS) (MINOR ALARMS)

Have the following information available when contacting the YASKAWA Representative:

- System
- Primary Application
- Software Version *(Located on Programming Pendant by selecting: {Main Menu} - {System Info} - {Version})*
- Warranty ID *(Located on Robot Controller)*
- Robot Serial Number *(Located on Manipulator data plate)*
- Robot Sales Order Number *(Located on Robot controller data plate)*

The Americas YASKAWA Representative

- 24-hour Telephone Number: **(937) 847-3200**
  Use for urgent or emergency needs for technical support, service and/or replacement parts
- Routine Technical Inquiries: *techsupport@motoman.com*
  Allow up to 36 hours for response

Part Number: 185898-1CD
Revision: 7

MANUAL NO.
HW1485245 ⑦

Contents

1 Introduction 1-1

2 Connection 2-1

2.1 Power Capacity 2-1

2.2 Power Supply 2-2

2.3 Connection Methods 2-3

2.3.1 Turning ON the Main Power Supply 2-6

2.3.2 Turning OFF the Main Power Supply 2-6

3 Basic Specifications 3-1

3.1 Standard module 3-1

3.2 Filter module 3-2

4 Equipment Configuration 4-1

5 General-purpose I/O Connection 5-1

1 Introduction

This manual is a supplementary instruction manual for the YRC1000micro European specification. The described contents are as follows;

- Connection
- Basic Specifications
- Controller Type List
- Dimension Diagram and Internal Arrangement Diagram
- The List of the Equipment Configuration
- Recommended Spare Parts List

For contents that are not described in this manual, refer to the “YRC1000micro INSTRUCTIONS”, “YRC1000micro MAINTENANCE MANUAL”, and all other related documents.

NOTE

Read this manual carefully before installation, operation, maintenance, or inspection of the YRC1000micro.

2 Connection

2.1 Power Capacity

The power capacity of each model, and cable size of primary power supply cable are shown in *table 2-1 "Example of YRC1000micro Circuit protector Capacity and Cable Size"* .

SUPPLE -MENT

- The maximum load value (payload, operation speed, and frequency, etc.) is displayed.
  However, the power capacity is different depending on work conditions.
- The power capacity is changed when using an external axis.
  For details of the power capacity with an external axis, please contact to your YASKAWA representative or check the rated value name plate on the controller.
- When selecting a transformer, contact your YASKAWA representative.

Table 2-1: Example of YRC1000micro Circuit protector Capacity and Cable Size

YRC1000micro type	**Capacity of circuit protector (A)**	**Cable size (size of terminal) (In case of Cabtyre cable (three cores)) (mm^2)**	**Major manipulator type**	**Power capacity (kVA)**
ERBR-100-06VX05-E0☐ (PNP) ERBR-100-06VX05-A0☐ (NPN)	16	3.5	MotoMINI	0.5
ERBR-100-06VX8-E0☐ (PNP) ERBR-100-06VX8-A0☐ (NPN)	16	3.5	GP4, GP7, GP8	1.0
ERBR-100-04SX650-E0☐ (PNP) ERBR-100-04SX650-A0☐ (NPN)	16	3.5	SG400, SG650	1.0
ERBR-100-06VXH12-E0☐ (PNP) ERBR-100-06VXH12-A0☐ (NPN)	16	3.5	GP12	1.5

NOTE

The power capacity shown above is the continuous rating value.

When the manipulator is rapidly accelerated, the power capacity of several times the continuous rating value may be needed instantly.

SUPPLE -MENT

- The power capacity is changed when using an external axis.
  For details of the power capacity with an external axis, please contact to your YASKAWA representative or check the rated value name plate on the controller.
- The power capacity of the manipulator which is not shown in the table above, refer to the table 5-1 "Basic Specifications" of Chapter 5 in the INSTRUCTIONS for the manipulator.

2.2 Power Supply

NOTE

The power failure processing circuit operates when there is a black out or drop in voltage, and the servo power turns OFF.

Connect the power supply to a stable power source that is not prone to power fluctuations.

The three-phase power supply comprising 200/220 VAC at 50/60 Hz is used.

The single-phase power supply comprising 200/230 VAC at 50/60 Hz can also be used for the following models:

- MotoMINI
- GP4
- GP7
- GP8
- SG400
- SG650

Fig. 2-1: Input Power Connection

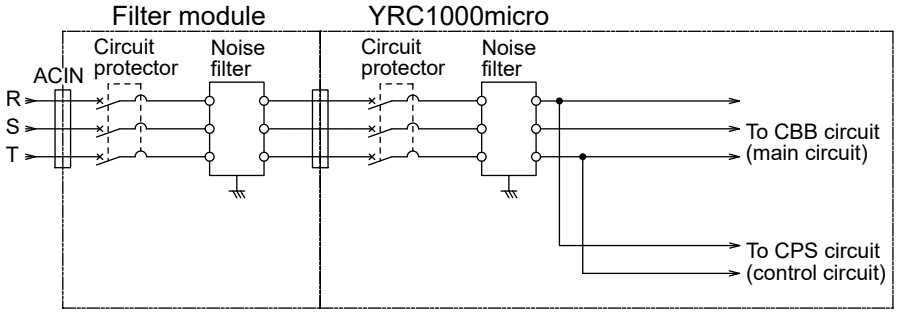

* Following models correspond single-phase
MotoMINI, GP4, GP7, GP8, SG400, and SG650

WARNING

- The system must be grounded.

Failure to observe this instruction may result in fire and/or electric shock. Especially when using European specification YRC1000micro in a power supply not being newtral grouded (in Japan etc.), there is adanger of electric shock due to alarge leakage current.

2.3 Connection Methods

A connection diagram between the manipulator and the YRC1000micro (manipulator cable) and between the YRC1000micro and the programming pendant (programming pendant cable) are shown below.

Please be noted that the programming pendant and the programming pendant cable are optional.

For their connection methods, refer to the following.

Fig. 2-2: Cable Connection

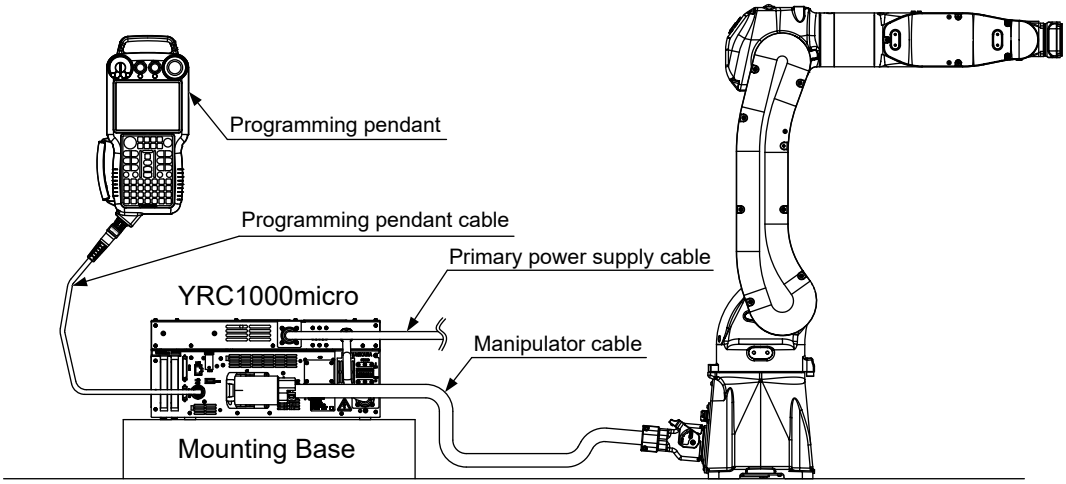

■ **Power Cable Connection**

1. Prepare a power cable by using the power connector delivered with the YRC1000micro.
   Refer to *table 2-2(a) "For Three-Phase Power Supply (ACIN(F))"* and *table 2-2(b) "For Single-Phase Power Supply (ACIN(F)) (Only for MotoMINI, GP4, GP7, GP8, SG400, and SG650)"* for the pin assignment of the YRC1000micro.
2. Confirm that the circuit protector of the YRC1000micro filter module is turned OFF.
   – ACIN(F) INPUT AC (for AC power input)
   – YRC1000micro-side connector: CE05-2A18-10PD-D
   – Primary power supply-side connector :
     CE05-8A18-10SD-D-BAS (with backshell)
     (manufactured by DDK Ltd.)
     When vertically mounted, prepare a straight type connector.

Table 2-2(a): For Three-Phase Power Supply (ACIN(F))

Pin No.	Signal Name	Description
A	L1	AC input (L1/R-phase)
B	L2	AC input (L2/S-phase)
C	L3	AC input (L3/T-phase)
D	P.E.	Protective grounding

Table 2-2(b): For Single-Phase Power Supply (ACIN(F))
(Only for MotoMINI, GP4, GP7, GP8, SG400, and SG650)

Pin No.	Signal Name	Description
A	L1	AC input (L1/R-phase)
B	N.C.	Not available
C	L3	AC input (L3/T-phase)
D	P.E.	Protective grounding

3. Confirm that the primary power supply is turned OFF.
4. Connect the primary power supply cable.

DANGER

- Make sure to use the supplied connector for the primary power supply connection.
- Tighten the cable clamp to prevent the cable from breaking.

Failure to observe these cautions may result in electric shock or equipment failure.

(1) Grounding method:

– Perform grounding as countermeasures against noise and electric shock.

– Follow the steps below:

I) Connect the ground wire to the D terminal of the YRC1000micro power connector (ACIN(F)).

II) Perform grounding in accordance with all relevant local and national electrical codes.
The size of ground wire must the same as listed on *table 2-1 “Example of YRC1000micro Circuit protector Capacity and Cable Size”* .

Fig. 2-3: Exclusive Grounding

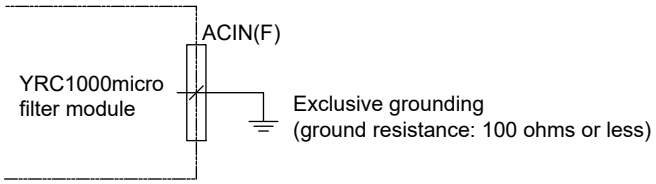

III) Connect the ground wire with the YRC1000micro and the filter module respectively as shown in the following figure.
The size of the ground wire must be same or larger than the size of the power supply cable shown in *table 2-1 "Example of YRC1000micro Circuit protector Capacity and Cable Size"* .

Fig. 2-4: Grounding the YRC1000micro and the Filter Module

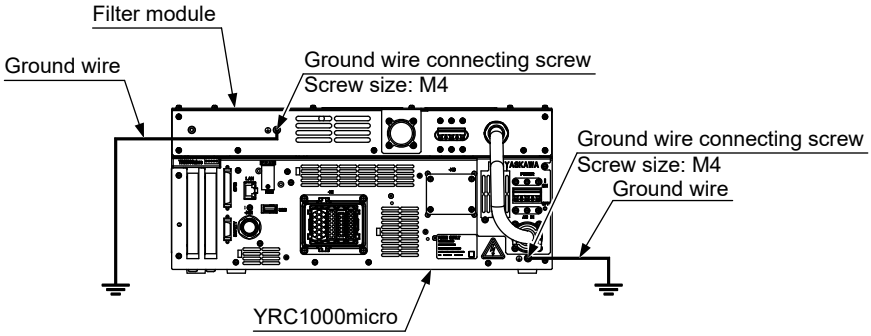

NOTE

The ground wire must be supplied by the user.

NOTE

Do not connect the ground wire with the wires for the electric power source, the welder, etc.

If using metallic ducts, metallic conduits, or cable trays for cabling, perform grounding in accordance with all relevant governmental regulations.

2.3.1 Turning ON the Main Power Supply

WARNING

- When turning ON the YRC1000micro power, confirm that no person is present in the manipulator's operating range and that the operator is in a safe location.

Personal injury may result if a person enters the manipulator's operating range during operation. Immediately press an emergency stop button whenever there is a problem. The emergency stop button is located on the upper right of the programming pendant.

Confirm that the switch of the YRC1000micro is turned to the “ON” position. And then turn ON the main power switch of the filter module. The initial diagnosis is performed in the YRC1000micro when the main power is turned ON, and the start up window is shown on the programming pendant.

Fig. 2-5: Switch of the YRC1000micro and the Filter Module

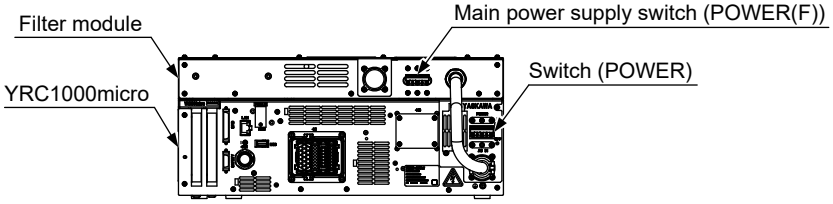

2.3.2 Turning OFF the Main Power Supply

When the servo power supply is turned OFF and the main power switch of the filter module (POWER(F)) is turned OFF, the power supply is turned OFF.

3 Basic Specifications

3.1 Standard module

Table 3-1: YRC1000micro Standard Module Basic Specifications

Controller	**Dust/Splash-proof construction**	IP20
	Dimensions	425(W) ×125 (H) ×280 (D) mm (without protrusion part)
	Cooling system	Direct cooling
	Power supply	-Three-phase 200/220 V AC (+10% to -15%) 50/60 Hz (±2%) -Single-phase 200/230 V AC (+10% to -15%) 50/60 Hz (±2%) (Neutral point grounding must be performed.) The specification of power supply differs depending on the type of YRC1000micro.
	Grounding	Grounding resistance: 100 Ω or less, exclusive grounding
	Noise level	60 dB or less
	Digital I/O	Specific signal (hardware) 7 inputs and 1 outputs General signals (standard, max.) 8 inputs and 8 outputs (Transistor: 8 outputs, Relay: 0 outputs)
	Positioning system	By serial communication (absolute encoder)
	Drive unit	SERVOPACK for AC servomotors
	Acceleration/ deceleration	Software servo control
	Memory capacity	200,000 steps, 10,000 instructions
Ambient conditions	**Ambient temperature**	0°C to + 40°C (during operation) -10°C to + 60°C (during transit and storage) Temperature change: 0.3°C/min or less
	Relative humidity	10%RH to 90%RH (non-condensing)
	Allowable altitude	2000 m or less (To use the YRC1000micro at the altitude over 1000 m, calculate the maximum ambient temperature by decreasing it by 1% per 100 m. The maximum allowable altitude is 2000 m. When the altitude is 2000 m, the maximum ambient temperature during operation is 36°C.)
	Vibration acceleration	0.5G or less
	Others	Free from corrosive gas or liquid, or explosive gas Must be used in an environment* that meets the standard of pollution degree 2 specified in IEC60664-1 *The environment must be clean with only a minimal amount of dirt and dust, and free from cutting oil, organic solvent, oil fume, water, or salt In particular, there should be no electrically-conductive dirt and dust Free from excessive electrical noise (plasma) Free from strong microwave, UV light, X-ray or radiation

3.2 Filter module

Table 3-2: Basic specifications of the YRC1000micro Filter Module

Type	JZRCR-BCS01-1
Dimensions	425(W) ×55 (H) ×280 (D) mm (without protrusion part)
Dust/Splash-proof construction	IP20

4 Equipment Configuration

This section explains the configuration of the YRC1000micro equipment.

■ Configuration

Fig. 4-1(a): Configuration (ERBR-100-xxxxxxx-x00)

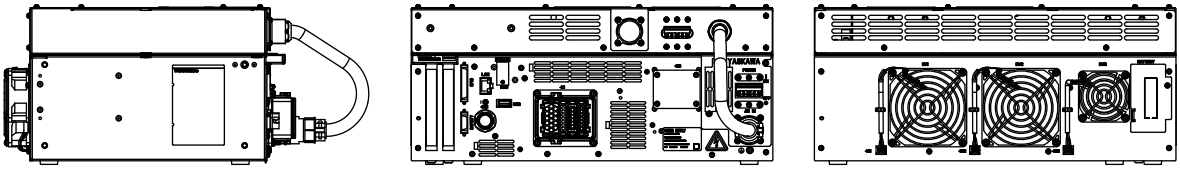

Left side view Front View Back View

YRC1000micro		Approx. mass [kg]	Major manipulator type
For Europe (I/O: PNP specification)	**For Europe (I/O: NPN specification)**		
ERBR-100-06VX05-E00 with JZRCR-BCS01-1	ERBR-100-06VX05-A00 with JZRCR-BCS01-1	16	MotoMINI
ERBR-100-06VX8-E00 with JZRCR-BCS01-1	ERBR-100-06VX8-A00 with JZRCR-BCS01-1		GP4
			GP7
			GP8
ERBR-100-06VXH12-E00 with JZRCR-BCS01-1	ERBR-100-06VXH12-A00 with JZRCR-BCS01-1		GP12
ERBR-100-04SX650-E00 with JZRCR-BCS01-1	ERBR-100-04SX650-A00 with JZRCR-BCS01-1		SG400
			SG650

Fig. 4-1(b): Configuration (ERBR-100-xxxxxxx-x01) (Environmental resistance model)

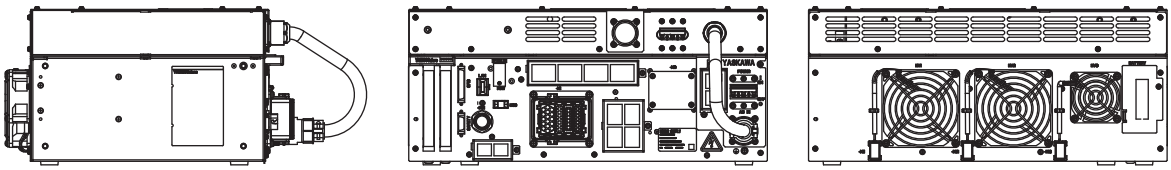

Left side view Front View Back View

YRC1000micro (Environmental resistance model)		Approx. mass [kg]	Major manipulator type
For Europe (I/O: PNP specification)	**For Europe (I/O: NPN specification)**		
ERBR-100-06VX05-E01 with JZRCR-BCS01-1	ERBR-100-06VX05-A01 with JZRCR-BCS01-1	16	MotoMINI
ERBR-100-06VX8-E01 with JZRCR-BCS01-1	ERBR-100-06VX8-A01 with JZRCR-BCS01-1		GP4
			GP7
			GP8
ERBR-100-06VXH12-E01 with JZRCR-BCS01-1	ERBR-100-06VXH12-A01 with JZRCR-BCS01-1		GP12
ERBR-100-04SX650-E01 with JZRCR-BCS01-1	ERBR-100-04SX650-A01 with JZRCR-BCS01-1		SG400
			SG650

5 General-purpose I/O Connection

Fig. 5-1: GPIO General-purpose I/O Connector (GPIO) Connection Diagram (JANCD-ASF31-1E (PNP))

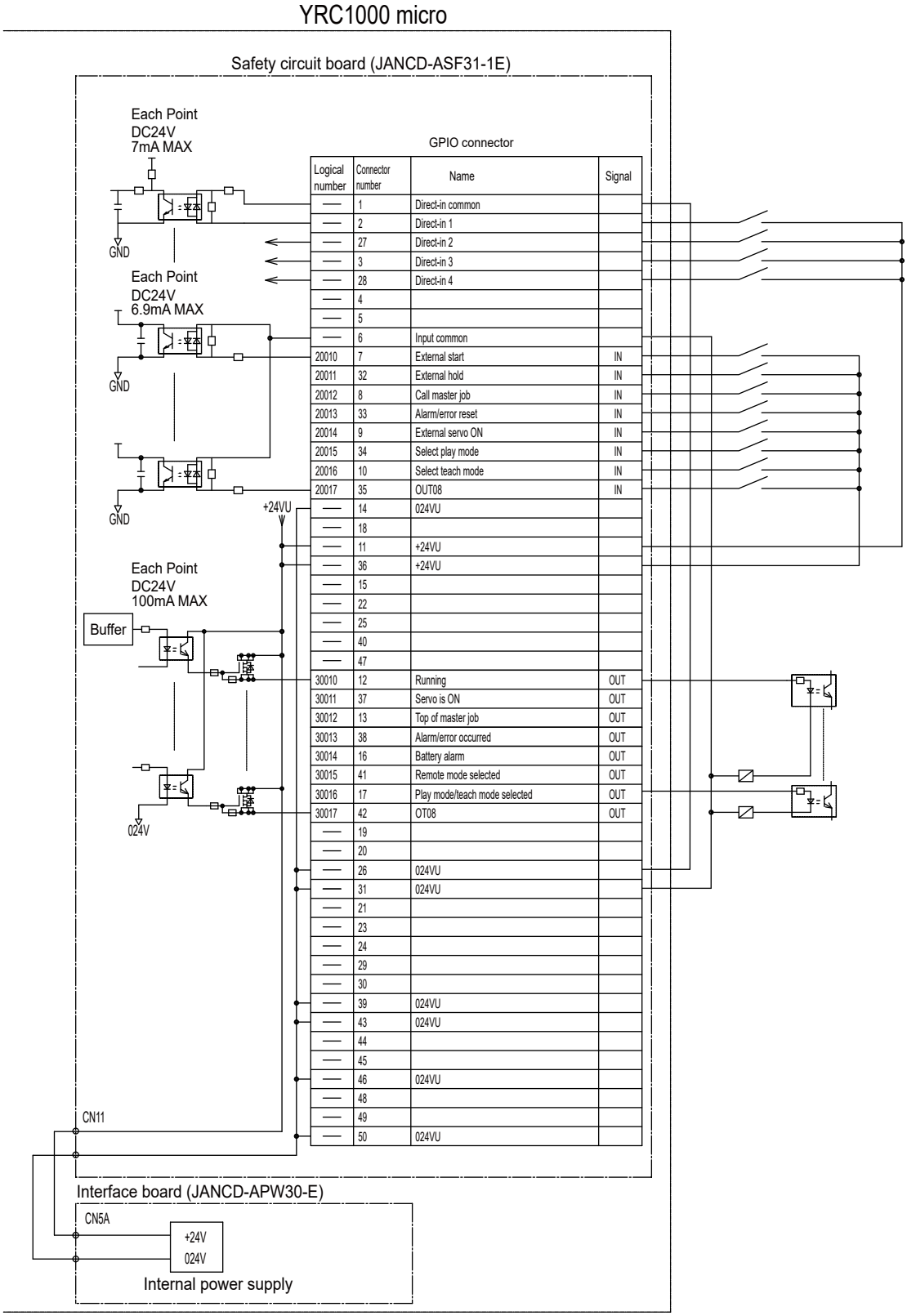

GPIO connector

Logical number	Connector number	Name	Signal
—	1	Direct-in common	
—	2	Direct-in 1	
—	27	Direct-in 2	
—	3	Direct-in 3	
—	28	Direct-in 4	
—	4		
—	5		
—	6	Input common	
20010	7	External start	IN
20011	32	External hold	IN
20012	8	Call master job	IN
20013	33	Alarm/error reset	IN
20014	9	External servo ON	IN
20015	34	Select play mode	IN
20016	10	Select teach mode	IN
20017	35	OUT08	IN
—	14	024VU	
—	18		
—	11	+24VU	
—	36	+24VU	
—	15		
—	22		
—	25		
—	40		
—	47		
30010	12	Running	OUT
30011	37	Servo is ON	OUT
30012	13	Top of master job	OUT
30013	38	Alarm/error occurred	OUT
30014	16	Battery alarm	OUT
30015	41	Remote mode selected	OUT
30016	17	Play mode/teach mode selected	OUT
30017	42	OT08	OUT
—	19		
—	20		
—	26	024VU	
—	31	024VU	
—	21		
—	23		
—	24		
—	29		
—	30		
—	39	024VU	
—	43	024VU	
—	44		
—	45		
—	46	024VU	
—	48		
—	49		
—	50	024VU	

*External power supply cannot be connected.

Fig. 5-2: GPIO General-purpose I/O Connector (GPIO) Connection Diagram (JANCD-ASF30-1E (NPN))

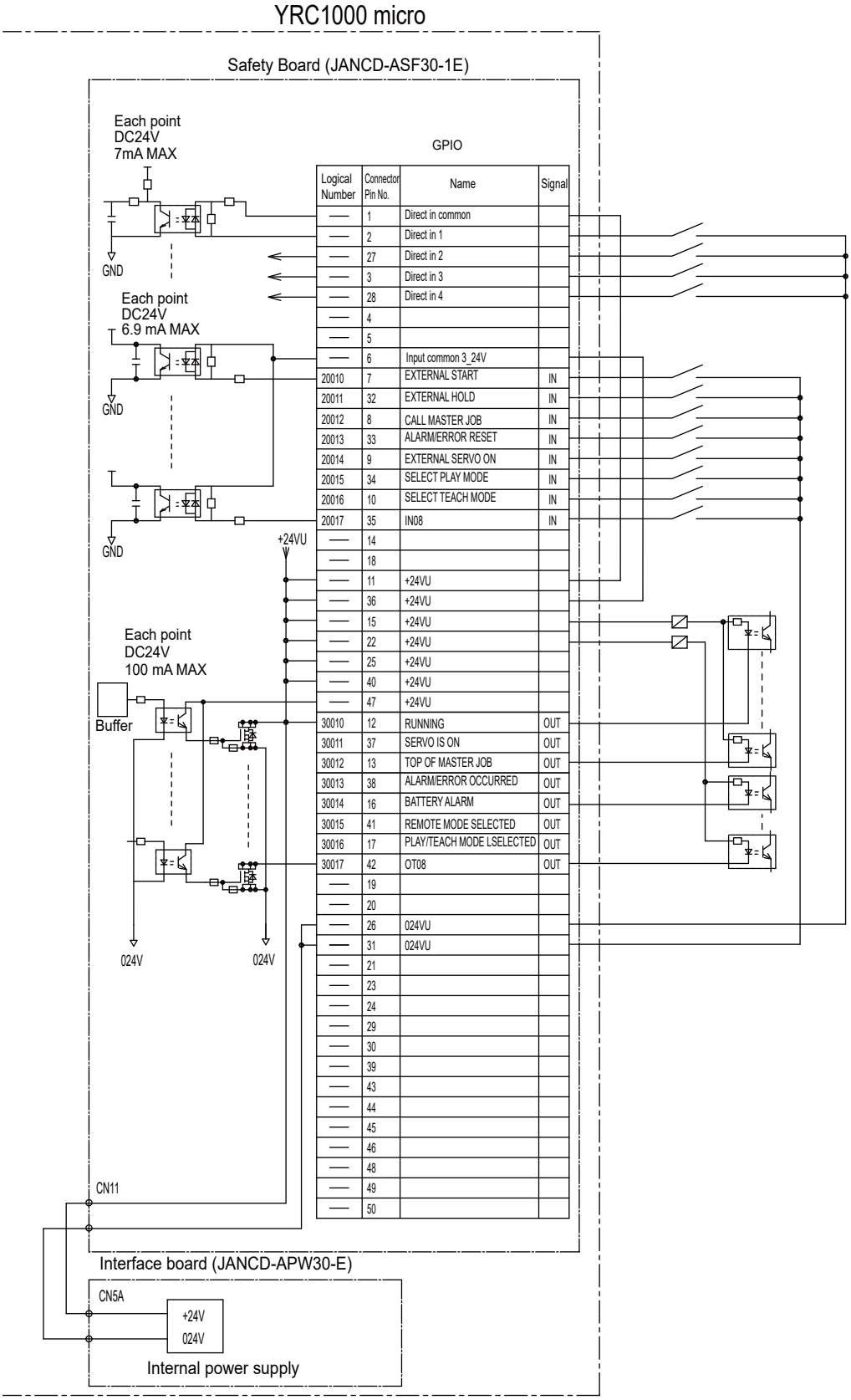

Logical Number	Connector Pin No.	Name	Signal
—	1	Direct in common	
—	2	Direct in 1	
—	27	Direct in 2	
—	3	Direct in 3	
—	28	Direct in 4	
—	4		
—	5		
—	6	Input common 3_24V	
20010	7	EXTERNAL START	IN
20011	32	EXTERNAL HOLD	IN
20012	8	CALL MASTER JOB	IN
20013	33	ALARM/ERROR RESET	IN
20014	9	EXTERNAL SERVO ON	IN
20015	34	SELECT PLAY MODE	IN
20016	10	SELECT TEACH MODE	IN
20017	35	IN08	IN
—	14		
—	18		
—	11	+24VU	
—	36	+24VU	
—	15	+24VU	
—	22	+24VU	
—	25	+24VU	
—	40	+24VU	
—	47	+24VU	
30010	12	RUNNING	OUT
30011	37	SERVO IS ON	OUT
30012	13	TOP OF MASTER JOB	OUT
30013	38	ALARM/ERROR OCCURRED	OUT
30014	16	BATTERY ALARM	OUT
30015	41	REMOTE MODE SELECTED	OUT
30016	17	PLAY/TEACH MODE LSELECTED	OUT
30017	42	OT08	OUT
—	19		
—	20		
—	26	024VU	
—	31	024VU	
—	21		
—	23		
—	24		
—	29		
—	30		
—	39		
—	43		
—	44		
—	45		
—	46		
—	48		
—	49		
—	50		

*External power supply cannot be connected.

Table 5-1: Specific Input (Press Tending, Cutting, and Other Applications)

Logical Number	**Input Name / Function**
20010	EXTERNAL START Functions the same as the [START] button in the programming pendant. Only the rising edge of the signal is valid. It starts robot operation (playback). This signal is invalid if external start is prohibited from the playback condition display.
20011	EXTERNAL HOLD The hold lamp turns on and the signal “HOLDING (50071)” turns ON while this signal is ON. Depending on the setting, the status of manipulator can be “HOLDING” while this signal is OFF.
20012	CALL MASTER JOB Only the rising edge of the signal is valid. It calls up the top of the robot program, that is the top of the master job[1)]. This signal is invalid during playback, during teach-lock and when play master or call is prohibited (set from the playback operation condition display).
20013	ALARM/ERROR RESET After an alarm or error has occurred and the cause been corrected, this signal resets the alarm or error.
20014	EXTERNAL SERVO ON Only the rising edge of this signal is valid. This signal turns ON the servo power. Use this signal to turn ON the servo power from an external device.
20015	SELECT PLAY MODE The play mode is selected when the mode key on the programming pendant is set at “REMOTE”. Only the rising edge of the signal is valid. When this selection signal assigned concurrently with other mode selection signal, the teach mode is selected on a priority basis. The signal is invalid while EXTERNAL MODE SWITCH is prohibited.
20016	PLAY/TEACH MODE SELECTED This signal notifies the current mode setting. These signals are synchronized with the mode select switch in the programming pendant. The signal corresponding to the selected mode turns ON

1 A master job is a job (program) which can be called by CALL MASTER JOB.
Other functions are the same as for normal jobs. Normally, the parent job, which manages the child jobs called up immediately after the power is turned ON, is set as the master job.

Table 5-2: Specific Output (Press Tending, Cutting, and Other Applications)

Logical Number	Output Name / Function
30010	RUNNING This signal signifies that the job is running. (Signifies that the job is running, system status is waiting reserved start, or test run is running.) This signal status is the same status as [START] in the programming pendant.
30011	SERVO IS ON This signal signifies that the servo power is turned ON, internal processing such as current position creation is complete, and the system is able to receive the START command. This signal turns OFF when the servo power supply turns OFF. It can be used for YRC1000micro status diagnosis for an external start.
30012	TOP OF MASTER JOB This signal signifies that the execution position is the top of the master job. This signal can be used to confirm that the master job has been called.[1)]***1***
30013	ALARM/ERROR OCCURRED This signal signifies that an alarm or an error occurred. If a major error occurs, this signal remains ON until the main power is turned OFF.
30014	BATTERY ALARM This signal turns ON to notify that the battery requires replacing when the voltage drops from the battery for backup memory of the encoder. Major problems may result if memory data is lost because of an expired battery. It is recommended to avoid these problems by using this signal as a warning signal.
30015	REMOTE MODE SELECTED This signal notifies the current mode setting. These signals are synchronized with the mode select switch in the programming pendant. The signal corresponding to the selected mode turns ON.
30016	PLAY MODE/TEACH MODE SELECTED This signal notifies the current mode setting. These signals are synchronized with the mode select switch in the programming pendant. The signal corresponding to the selected mode turns ON.

1 This signal is not output during operation.

YRC1000micro
SUPPLEMENTARY INSTRUCTIONS
FOR EUROPEAN STANDARD

For inquiries or after-sales service on this product, contact your local YASKAWA representative as shown below.

YASKAWA ELECTRIC CORPORATION
2-1 Kurosakishiroishi, Yahatanishi-ku, Kitakyushu, 806-0004, Japan
Phone: +81-93-645-7703 Fax: +81-93-645-7802
www.yaskawa.co.jp

YASKAWA AMERICA, INC. (MOTOMAN ROBOTICS DIVISION)
100 Automation Way, Miamisburg, OH 45342, U.S.A.
Phone: +1-937-847-6200 Fax: +1-937-847-6277
www.motoman.com

YASKAWA EUROPE GmbH (ROBOTICS DIVISION)
Yaskawastrasse 1, 85391, Allershausen, Germany
Phone: +49-8166-90-0 Fax: +49-8166-90-103
www.yaskawa.eu.com

YASKAWA NORDIC AB
Verkstadsgatan 2, Box 504, SE-385 25 Torsas, Sweden
Phone: +46-480-417-800 Fax: +46-486-414-10
www.yaskawa.se

YASKAWA ELECTRIC (CHINA) CO., LTD.
22F, One Corporate Avenue, No.222 Hubin Road, Huangpu District, Shanghai 200021, China
Phone: +86-21-5385-2200 Fax: +86-21-5385-3299
www.yaskawa.com.cn

YASKAWA SHOUGANG ROBOT CO., LTD.
No.2 Building, No.6 Rongchang East Street, Beijing E&T Development Area, Beijing 100176, China
Phone: +86-10-6788-2858 Fax: +86-10-6788-2878
www.ysr-motoman.cn

YASKAWA ELECTRIC KOREA CORPORATION
6F, 112, LS-ro, Dongan-gu, Anyang-si, Gyeonggi-do, 14118, Korea
Phone: +82-31-8015-4224 Fax: +82-31-8015-5034
www.yaskawa.co.kr

YASKAWA ELECTRIC TAIWAN CORPORATION
12F, No.207, Sec. 3, Beishin Rd., Shindian District, New Taipei City 23143, Taiwan
Phone: +886-2-8913-1333 Fax: +886-2-8913-1513
www.yaskawa.com.tw

YASKAWA ASIA PACIFIC PTE. LTD.
30A Kallang Place, #06-01, 339213, Singapore
Phone: +65-6282-3003 Fax: +65-6289-3003
www.yaskawa.com.sg

YASKAWA ELECTRIC (THAILAND) CO., LTD.
59, 1st-5th Floor, Flourish Building, Soi Ratchadapisek 18, Ratchadapisek Road, Huaykwang,
Bangkok 10310, Thailand
Phone: +66-2-017-0099 Fax: +66-2-017-0199
www.yaskawa.co.th

PT. YASKAWA ELECTRIC INDONESIA
Secure Building-Gedung B Lantai Dasar & Lantai 1 Jl. Raya Protokol Halim Perdanakusuma,
Jakarta 13610, Indonesia
Phone: +62-21-2982-6470 Fax: +62-21-2982-6471
www.yaskawa.co.id

YASKAWA INDIA PRIVATE LIMITED (ROBOTICS DIVISION)
No.136, Sector-8, Industrial Estate, IMT Manesar, Gurugram, Haryana 122050, India
Phone: +91-124-475-8500
www.yaskawaindia.in

©2018 YASKAWA ELECTRIC CORPORATION

Published by YASKAWA

YASKAWA

YASKAWA ELECTRIC CORPORATION

August 2024 18-03

MANUAL NO.
HW1485245 ⑦